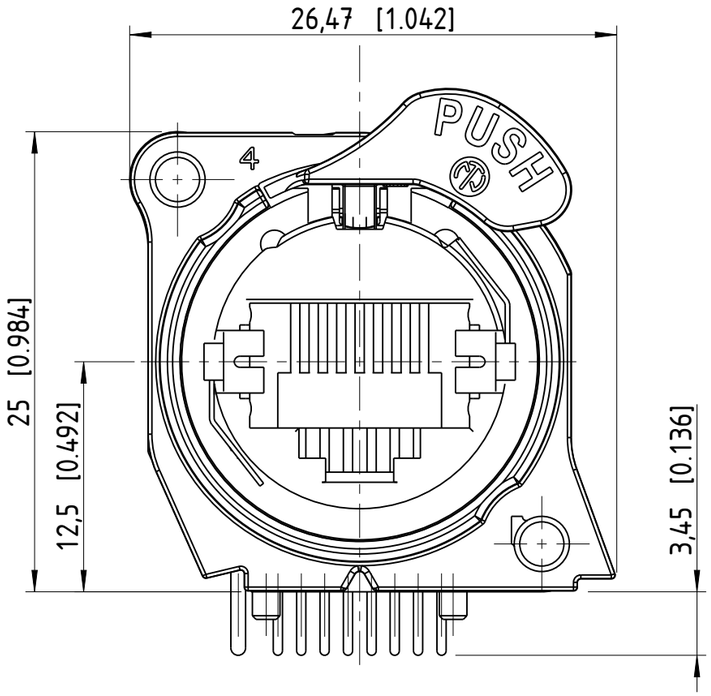

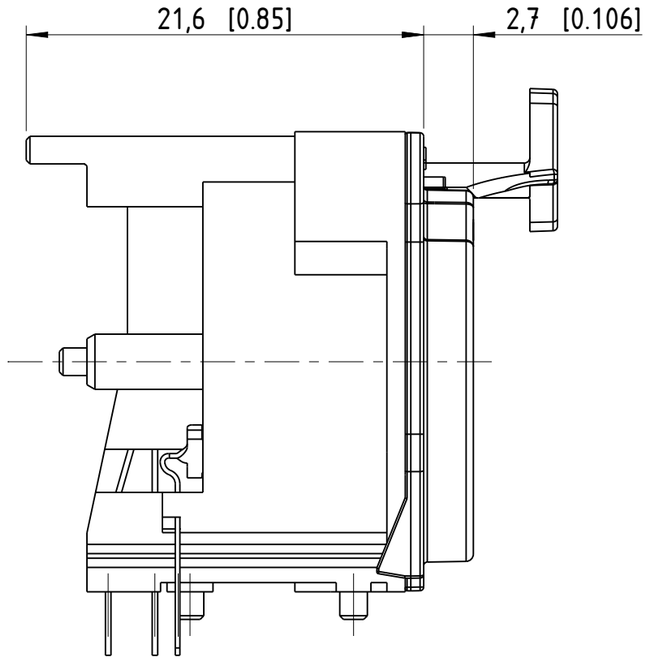

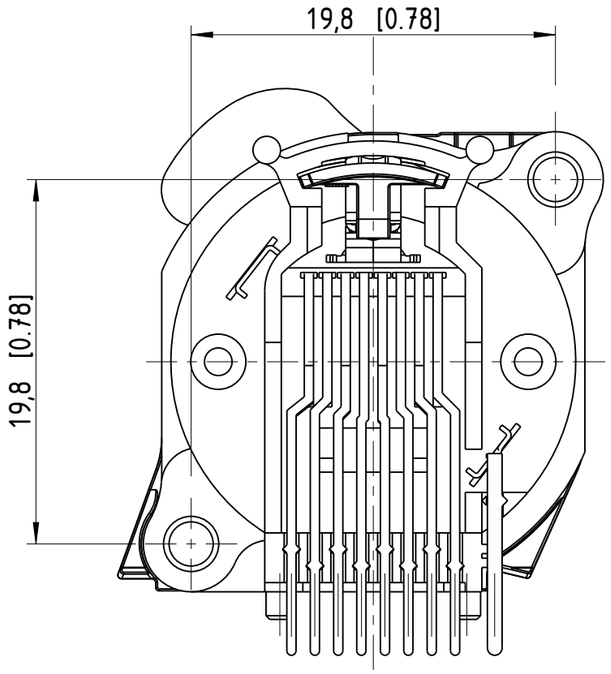

Panel cut out (rear side)

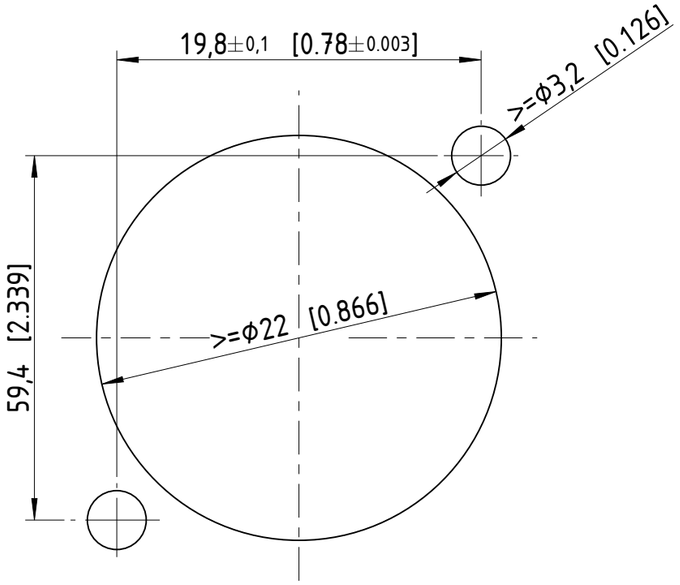

PCB-Layout (component side)

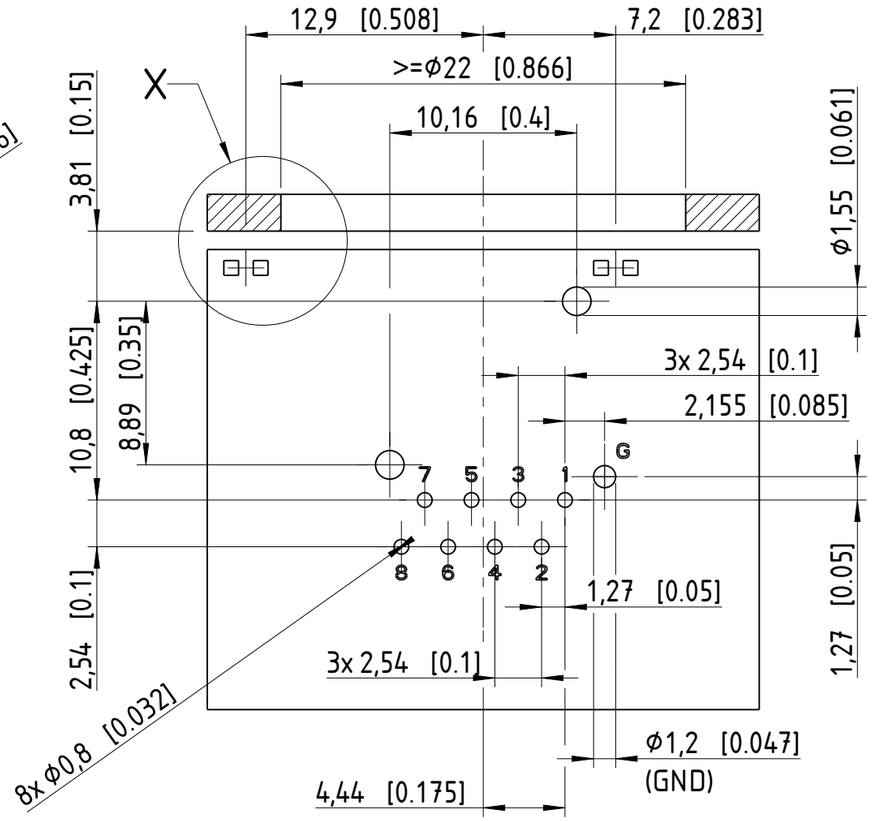

Detail X
5:1

LED size: 0603 (max height: 0.8mm)
Recommended solder pad layout:

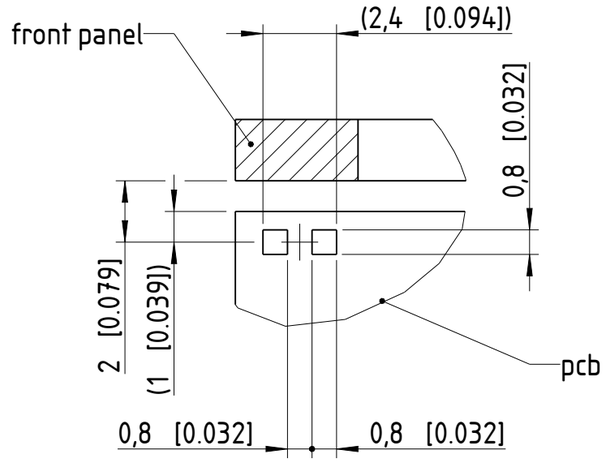

Sheet Number	Projection	Scale	Format	General Tolerancing	
1/1		3:1	A3	ISO 2768 mK	
Description			Created on/by	28.07.2021	Fritsch S.
ST-NE8FAH-LR-DAE			Approved on/by	02.08.2024	Schmiedl T.
			Article ID	Model ID	Drawing ID
			NE8FAH-LR-DAE	30009006	20003562
Status			Revision	ECN Number	Neutrik Group
Released			-	-	

Copyright © Neutrik AG / Im alten Riet 143 / 9494 Schaan / Liechtenstein