ASSEMBLY INSTRUCTION

NSSC-* | Sealing self-closing cap powerCON

A NSSC-1 | Sealing self-closing cap D for powerCON NAC3MP*

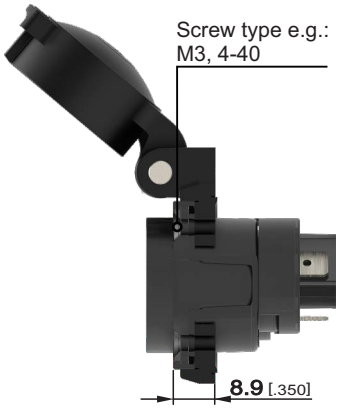

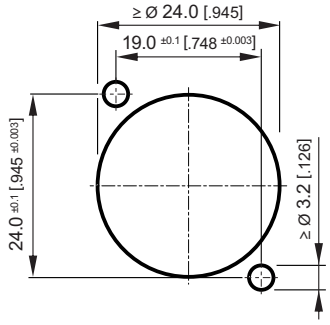

(!)

B NSSC-2 | Sealing self-closing cap FPX for powerCON NAC3FPX*

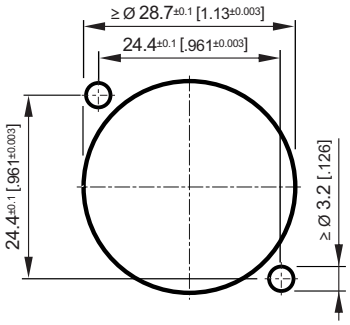

(!)

C NSSC-3 | Sealing self-closing cap PX for powerCON NAC3PX*

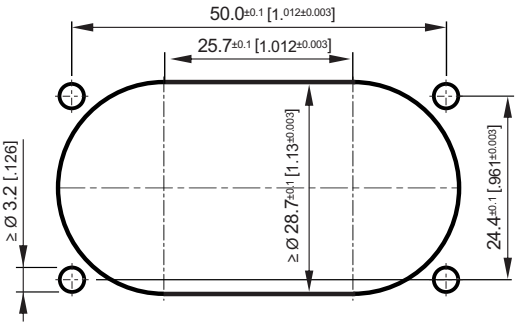

(!) **Panel Cutout: Front view**

powerCON Connectors: Find more details on www.neutrik.com

Neutrik AG	**LI**	T: +423 / 237 24 24	F: +423/232 53 93	**Neutrik France**	**FR**	T: +33 1/4131 6750	F: +33 1/4131 0511
Neutrik USA Inc.	**USA**	T: +1 704 / 972 3050	F: +1 704/438 9202	**Neutrik Tokyo Ltd.**	**JP**	T: +81 3/3663 4733	F: +81 3/3663 4796
Neutrik (UK) Ltd.	**UK**	T: +44 1983 / 811 441	F: +44 1983/811 439	**Neutrik Hong Kong Ltd.**	**HK**	T: +852/2687 6055	F: +852/2687 6052
Neutrik Vertriebs GmbH	**DE / NL / AT/DK**	T: +49 8131 / 280 890	F: +49 8131/280 830				

Draft. Nr.: BDA 623 V1 | **Update: 2021-05-12** | Data subject to change without prior notice. © 2021 NEUTRIK®. NEUTRIK® are registered trademark of Neutrik AG. ALL RIGHTS RESERVED.

www.neutrik.com